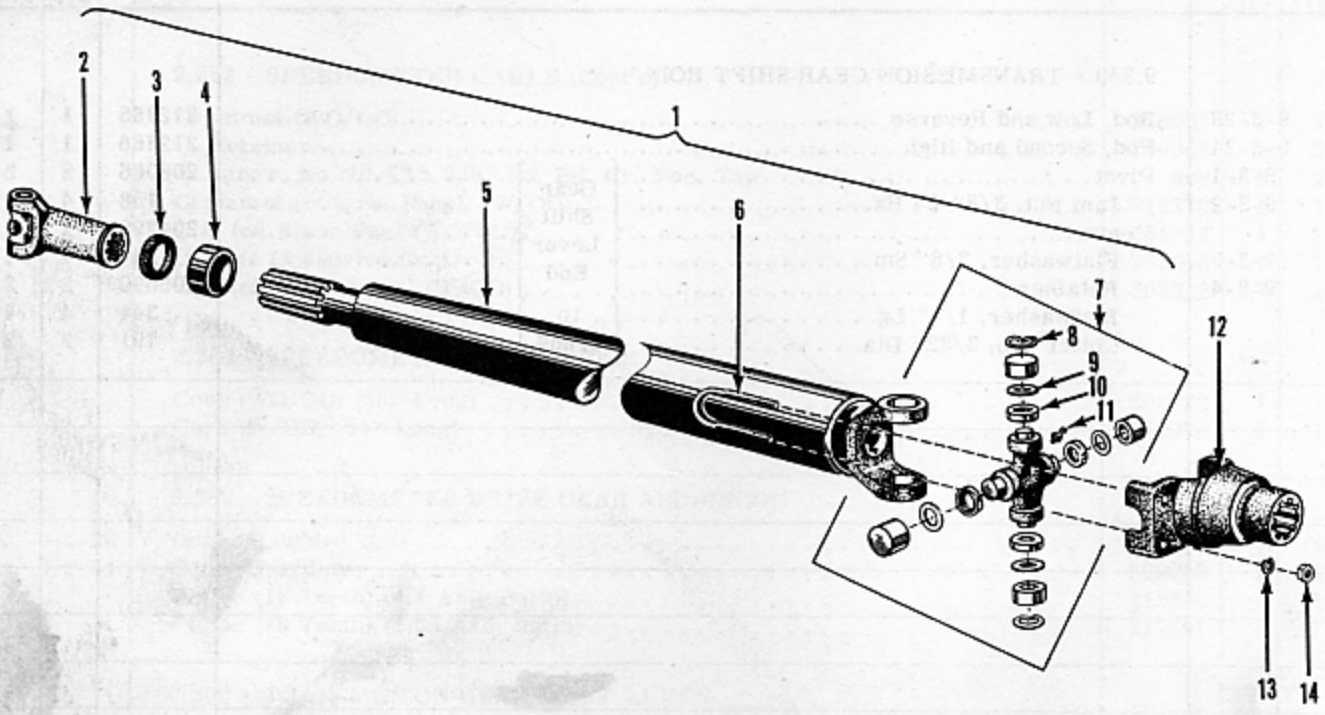

FIGURE 11-1—PROPELLER SHAFT AND JOINTS—EXPLODED VIEW

KEY	PART NAME	GROUP
1	Shaft and Joints	11.000
2	Slip Yoke and Plug	11.005
3	Washer (Cork)	11.005
4	Cap	11.005
5	Shaft and Yoke	11.002
6	"U" Bolt	11.000
7	Cross and Bearing Kit	11.030
8	Snap Ring	11.030
9	Oil Seal	11.030
10	Retainer, Oil Seal	11.030
11	Oiler	11.030
12	Flange, Rear	11.020
13	Lockwasher, "U" Bolt	11.000
14	Nut, "U" Bolt	11.000

FIGURE NUMBER	GROUP, PART NAME and DESCRIPTION	PART NUMBER	USED PER CAR MODEL 513	514
	11.000 - PROPELLER SHAFT AND JOINTS			
11-1-1	Shaft and Joints (Standard Trans.)	209878	1	1
11-1-1	Shaft and Joints (Overdrive Trans.)	209879	1	1
11-1-6	"U" Bolt { to Front and Rear Flange }	208015	4	4
11-1-13	Lockwasher, 5/16" Med. { to Front and Rear Flange }	240	8	8
11-1-14	Nut, 5/16"-24 Hx. Lt { to Front and Rear Flange }	189	8	8
	11.002 - PROPELLER SHAFT AND YOKE			
11-1-5	Shaft and Yoke (Standard Trans.)	212487	1	1
11-1-5	Shaft and Yoke (Overdrive Trans.)	209880	1	1
	11.004 - PROPELLER SHAFT COMPANION FLANGE - FRONT			
9-1-34	Flange	212321	1	1
9-1-35	Flatwasher, 49/64" x 1 1/2" x 3/32" { to Trans. Shaft }	201342	1	1
9-1-36	Lockwasher, 3/4" Med { to Trans. Shaft }	336	1	1
9-1-37	Nut, 3/4"-16 Hx. { to Trans. Shaft }	201341	1	1
	11.005 - PROPELLER SHAFT SLIP YOKE AND PLUG			
11-1-2	Slip Yoke and Plug (Standard and Overdrive Trans.)	209881	1	1
	Oiler	202121	1	1
11-1-4	Cap	209882	1	1
11-1-3	Washer (Cork)	209883	1	1
	11.020 - PROPELLER SHAFT COMPANION FLANGE - REAR			
11-1-12	Flange (incl. Shield)	208074	1	1
12-1-4	Flatwasher	200424	1	1
12-1-3	Locknut	208017	1	1
	11.030 - PROPELLER SHAFT JOINT REPAIR KIT			
11-1-7	Cross and Bearing Kit (incl. Cross, Bearings, Retainers, Snap Ring and Oil Seals)	208075	2	2
11-1-9	Oil Seal	208078	8	8
11-1-10	Retainer, Oil Seal	208079	8	8
11-1-8	Snap Ring	208080	8	8
11-1-11	Oiler	202121	2	2